RG-RSR20-14F V5.0

copyright © 2022

http://www.ruijie.com.cn000

000

2.

1

RG-RSR20-14F V5.0

RG-RSR20-14F V5.0

RG-RSR20-14F V5.0 RSR20-14F V5.0

1.1 RSR20-14F V5.0

1.1.1 RSR20-14F V5.0

RSR20-14F V5.0

RSR20-14F V5.0 BGP
IP QoS ISP

QoS VPN IPv6

QoS RED WRED CAR
GTS FIFO,PQ,CQ,WFQ,CBWFQ,LLQ,RTPQ CTCP CRTP QoS

REF

CPU VCPU

STP 802.1x

IGP RIPv1/v2 OSPFv2/v3 ISIS BGP IGP

IPv6 SATAP IPv6 IPv4 6to4 IPv6 overIPv4 GRE 6over4

IPv6 IPv4 IPv6 IPv4

IGMP V1 V2 V3 DVMRP PIM-DM/SM

1.1.2 RG-RSR20-14F V5.0

RG-RSR20-14F V5.0

	RG-RSR20-14F V5.0	
	4	RG-RSR20-14F V5.0 2 HNM 2 HSIC
	2	RG-RSR20-14F V5.0 2
	( )	
	DDR 2GB	
	FLASH 512MB	
I/O	9 GE GE 0/0/0~0/0/8 10/100/1000M 8 SFP 1000BASE-	

1-1 RG-RSR20-14F V5.0

SFP 1-8F	1F~8F	1000Mbps LinkUp 1000Mbps 100Mbps LinkUp 100Mbps
USB	USB	USB USB
FUNC	/	FUNC
U-Console	U-Console	USB

console U-console Mini USB Mini USB-B
5pin mini-B

U-console RGOS

USB

USB USB USB
USB RGOS FUNC

	USB2.0
	USB Host
	Host

USB RGOS USB

USB U

SD

SD SD RGOS FUNC

	SD/SDHC
	SD Connector
	1.5MB/sec
	Device
SD	SD

SD RGOS SD
SD SD SD
SD

FUNC

RSR20-14F V5.0

FUNC

SD U FUNC

SD U FUNC SD

RG

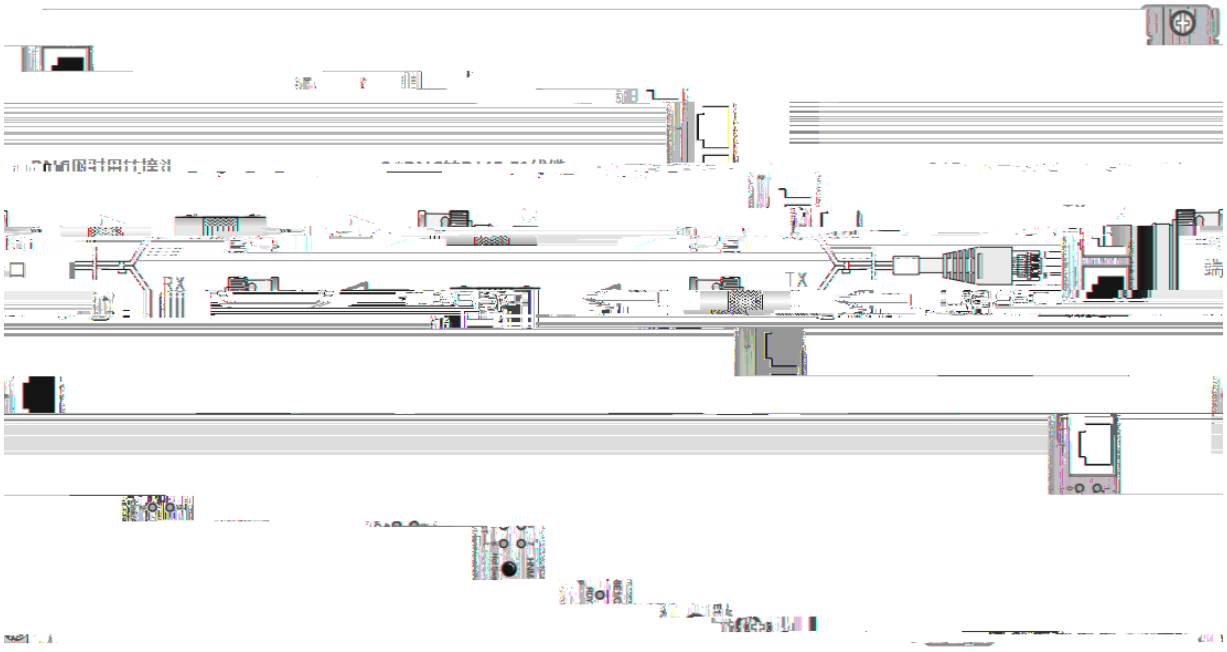

75Ω E1 impedance 75-BNC

4. BNC E1 -BNC

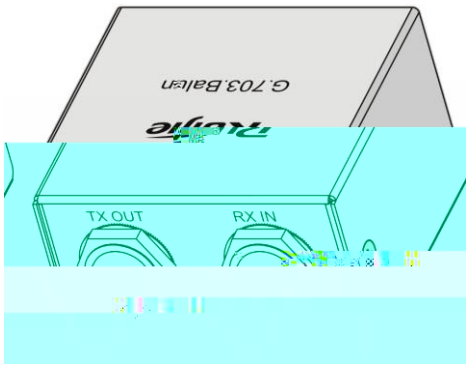

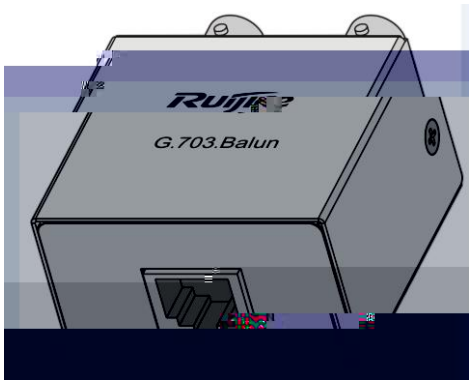

RJ45 BNC

RJ45		BNC	
1	RTIP	RX IN	RX
2	RRING	RX IN	SHEEL(PGND)
3	PGND	PGND	PGND
4	TTIP	TX OUT	TX
5	TRING	TX OUT	SHEEL(PGND)
6	PGND	PGND	PGND
7	NC	-	-
8	NC	-	-

1 RX HNM-8E1/CE1 RX TX

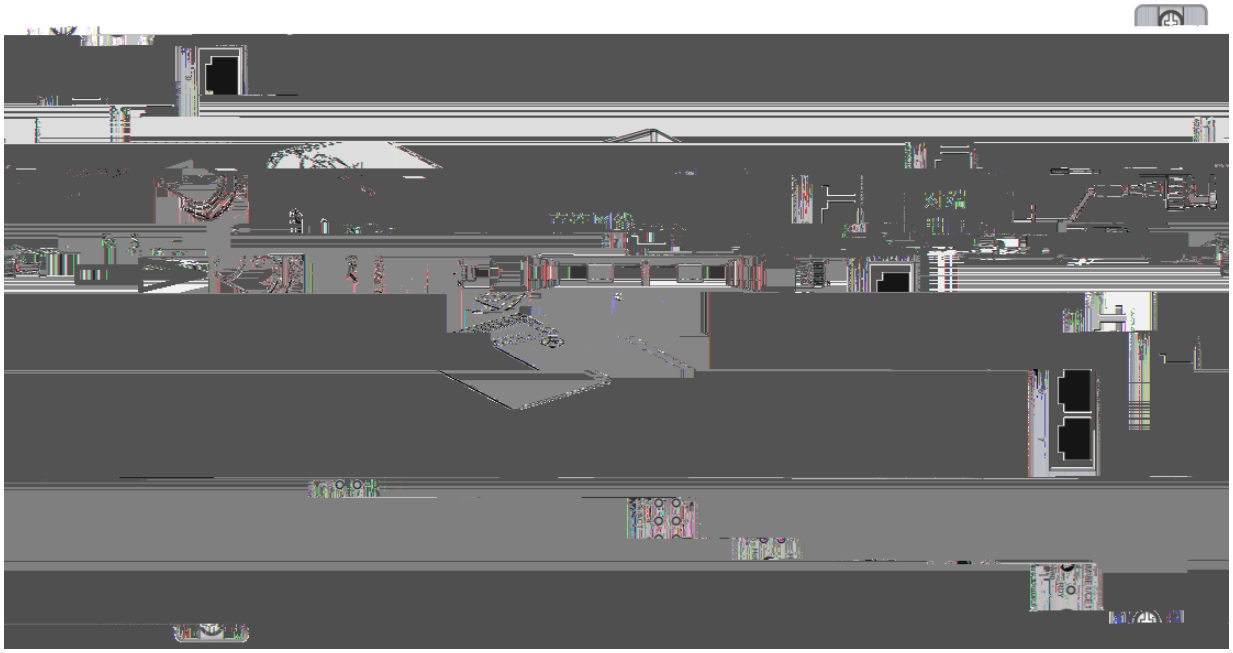

2	E1	HNM-8E1/CE1

1-4 IPsec HNM HNM-SEC

RDY OFL

HNM-SEC

RDY		

OFL

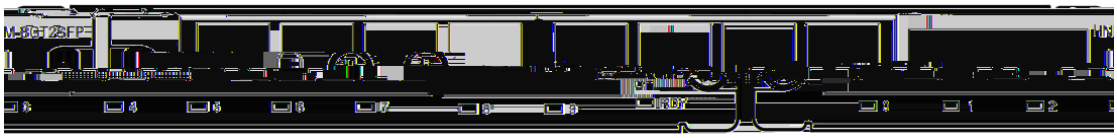

RDY RJ45 1 Link/ACT

1 Link/ACT Link/ACT

HNM-8GT2SFP

RDY		
RJ45 Link/ACT	RJ45 0~7	1000Mbps LinkUp 1000Mbps 100M/10Mbps LinkUp 100M/10Mbps
SFP 8~9 Link/ACT	8~9	1000Mbps LinkUp 1000Mbps 100M/10Mbps LinkUp 100M/10Mbps

RJ45 SFP Small Form-Factor Pluggable

HNM-8GT2SFP

	HNM-8GT2SFP
	8 10M /100M /1000M RJ45 2 SFP 100M /1000M SFP 10M/100M /1000M SFP
	IEEE 802.3
	ESD 6KV 8KV

HNM-8GT2SFP

RG

1-12 HSIC-2FXS

RDY FXS 1 IN USE IN USE

HSIC-2FXS

HSIC-2FXS

1.3

M5000E-AC60 PD240I

1.3.1 M5000E-AC60

1-6 RG-M5000E-AC60 (2)

1-7 RG-PD240I (2)

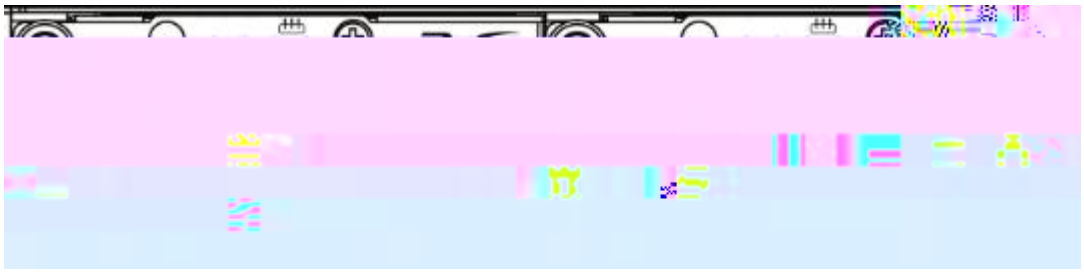

	RG-PD240I
	RSR20-14F V5.0
	-36Vdc -72Vdc
	60W
	1+1
	18V
	5.5~10A
	PD240I
	203.3*81*40mm

2

2.1

A

2.1.1

UPS

2.1.2

2.1.3

RSR20-14F V5.0

2.1.4

/

18 24

2.2

2.2.1

2.2.2

0.8

2.2.3 /

RSR20-14F V5.0

0 ~50

10%~90%

1.5m 0.4m

2.2.4

	/m³	
	/m³	

	mg/m3	mg/m3
SO2	0.3	1
H2S	0.1	0.5
NO2	0.5	1
Cl2	0.1	0.3

30

N

RSR20-14F V5.0 1

RG-RSR20-14F V5.0

2.2.6

Â

2.2.7 ⅈ ⅎ ⊂ ₱ / ⅄ ∏ κ

RSR20-14F V5.0

2.3 [illegible]

3

3.1

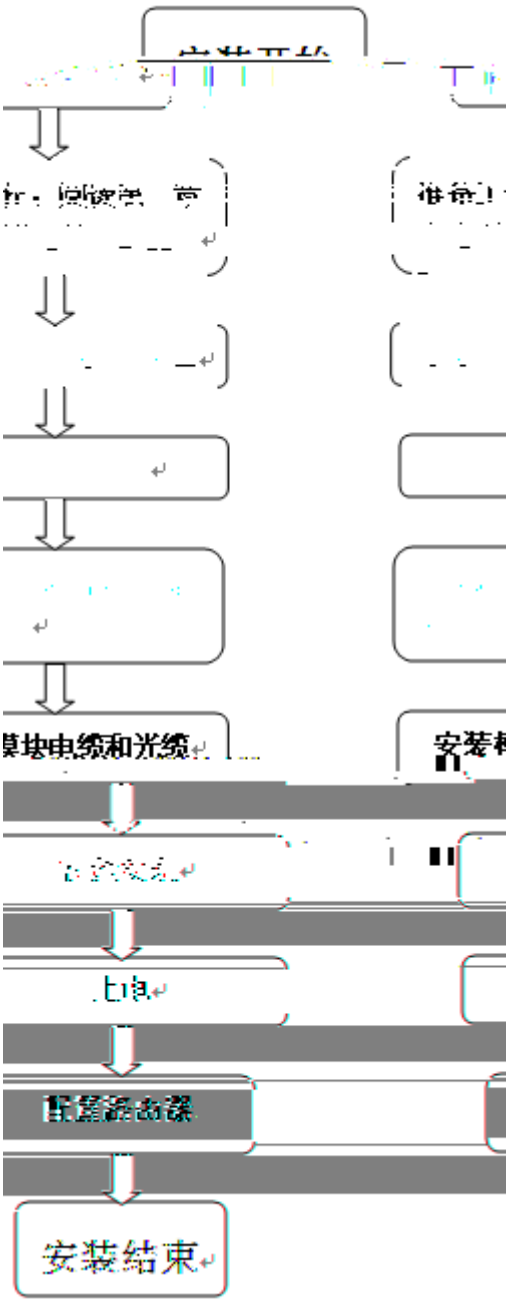

RSR20

3.4

3.4.1

RSR20-14F V5.0 PD240I

RSR20-14F V5.0 RG-PD240I RG-PD240I

1

2 2.4.1 b PD240I

3

3.5

3.5.1

3.5.2

console	U-console			Mini_usb	4pin	mini-B	USB	5pin	mini-B
USB	5pin	mini-B							

4

4.1

4.1.1

Console

RS232 Console

Console

连接到
Ruijie
输入待拨电话的详细信息:
区号(E):
电话号码(P):
连接时使用(N):
COM1

COM1 属性
端口设置
每秒位数(B):
9600
数据位(D):
8
停止位(S):
1
还原为默认值(R)

4.1.2

4.1.2.1

4.1.2.2

ON

8

```
Ruijie>




dualboot crc verify:
################################################################################################################
################################################################################################################
################################
Master boot is ok!
Press CTRL+T to do memory poweron-self-test!
System bootstrap(Master boot) ...
Boot Version: RGOS 10.4(3b99) Release(218135)
Nor Flash ID: 0x017E1000, SIZE: 8388608Bytes
Using 1500.000 MHz high precision timer.
MTD_DRIVER-5-MTD_NAND_FOUND: 1 NAND chips(chip size : 536870912) detected
Press Ctrl+C to enter Boot .....
Verify the image ......[ok]
```

4.2

5

5.1

RSR20-14F V5.0 PWR

power

5.2

9600 8

1 VT100

6

6.1

6.2

1.

2cm

6-1

1

2

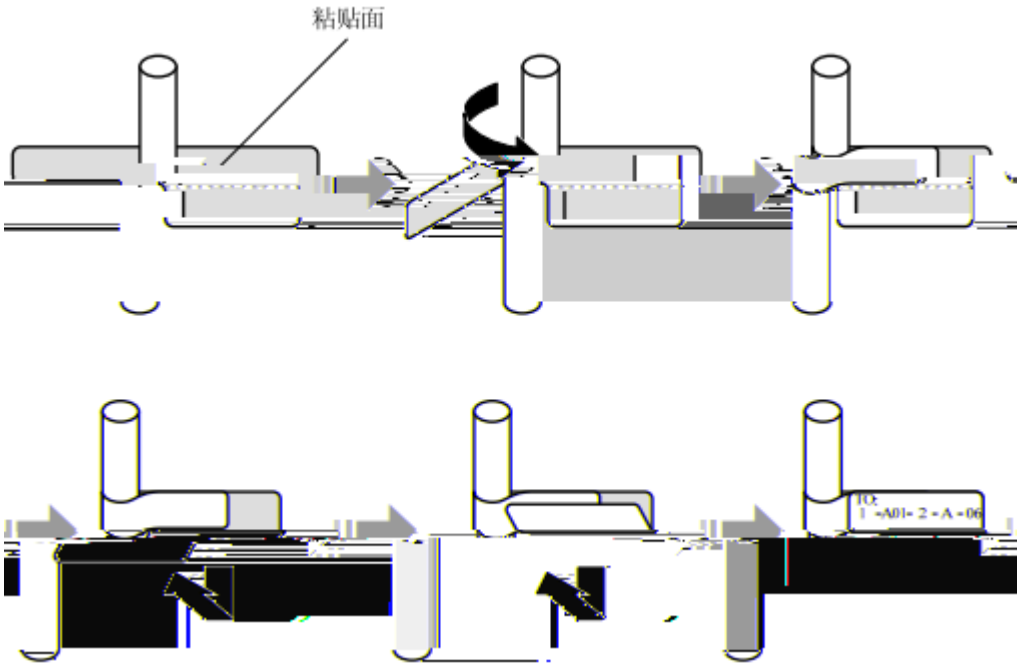

6.3

1

2

3
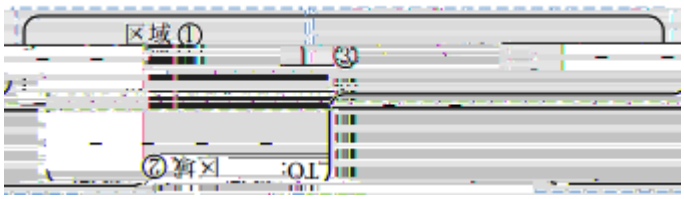
6-3